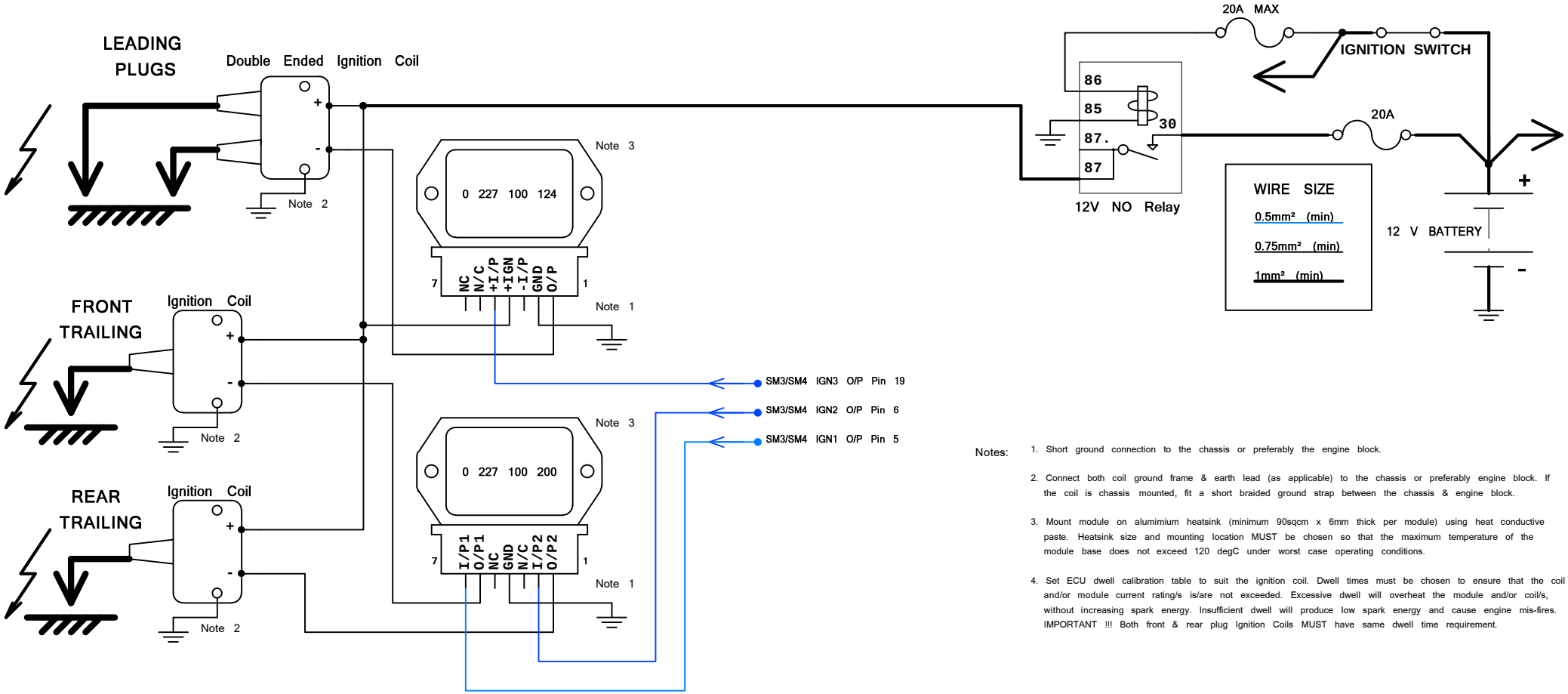

Notes:

1. Short ground connection to the chassis or preferably the engine block.
2. Connect both coil ground frame & earth lead (as applicable) to the chassis or preferably engine block. If the coil is chassis mounted, fit a short braided ground strap between the chassis & engine block.
3. Mount module on alumimium heatsink (minimum 90sqcm x 6mm thick per module) using heat conductive paste. Heatsink size and mounting location MUST be chosen so that the maximum temperature of the module base does not exceed 120 degC under worst case operating conditions.
4. Set ECU dwell calibration table to suit the ignition coil. Dwell times must be chosen to ensure that the coil and/or module current rating/s is/are not exceeded. Excessive dwell will overheat the module and/or coil/s, without increasing spark energy. Insufficient dwell will produce low spark energy and cause engine mis-fires. IMPORTANT !!! Both front & rear plug Ignition Coils MUST have same dwell time requirement.

0 227 100 124200 Single Ignition Module	
Temp range	
Max vibration	
Ic typ	
Ic max @ < 120degC	

0 227 100 200 Dual Ignition Module	
Temp range	
Max vibration	
Ic typ	
Ic max @ < 120degC	

SM3 & SM4 ECU SETUP	
IGNITION O/P PATTERN	2cyl TPMC+WS
IGNITION O/P TYPE	-ve edge (DWELL)
Dwell/pulse times (TABLE)	SEE NOTE4
Ign delay time	20 uSEC

© Copyright
Aubert Electronics Pty. Ltd.
Victoria Australia

Autronic
FUEL INJECTION — ADVANCED CONTROLS

Title: 2 ROTOR - 3 COIL IGNITION (Wasted leading spark)		
Approved by: RWA	Date: 12-Mar-15	Size: A4
Document No:	Sheet 1 of 1	Revision: 1.0